The Torus - 3D Tank Cleaning Tool, up to 22 kpsi (TR-130)

Description:

The **Torus** 3D Tool is designed for cleaning tanks, vessels, autoclaves, ducts and reactor interiors. The tool is capable of working pressures up to 22,000 psi (1500 bar) and flow rates of 10 to 80 gpm. The wide range of flow rates is accommodated by the use of four different manifolds: High Flow (R30), Medium Flow (R50), Low Flow (R90) and Extra Low Flow (R150). A maintenance-free magnetic brake is used to control rotation speed. Note that rotation speed may increase as the tool warms up to operating temperature. The complete Torus cleaning cycle varies from about 4 to 30 minutes of operating time depending on rotation speed, which is determined by pressure, flow rate, nozzle diameter, manifold choice and brake setting. A complete cleaning cycle is 92 revolutions of the body. The HP manifold revolves 2.36 times for each body revolution. When used in large vessels, extension arms up to 36 inches long can be used to reduce the jet standoff distance. The Torus can be hung from the high pressure water hose or by the optional pulling ring available for the tool. It is recommended to blow out all internal water passages (nozzles, weep holes, inlet) with compressed air after each use.

WARNING: The Torus contains several high-energy, rare-earth magnets that produce a magnetic field in excess of 10 Gauss. Persons with a pacemaker or other electronic medical device must use extreme caution when handling, or in close proximity to the Torus. It is recommended that a minimum distance of 6 inches (152mm) be maintained at all times between the Torus and any electronic medical devices.

CAUTION: The use of gloves when handling the tool after operation is recommended as the body at the pulling ring end may reach temperatures of up to 160ÁF depending on operating conditions.

Operation:

Before use, confirm that the installed manifold is the correct configuration to match the operating pressure and flow rate. Failure to use the correct manifold will result in an over-speed condition causing permanent component damage, or a condition in which the tool rotates very slowly or not at all. The chart below shows the correct manifold to use for various pressure and flow combinations. Make absolutely certain that the two nozzles being used are the same size and in good condition, otherwise the Torus may rotate erratically, too fast, or not at all. To use the chart, first select the operating pressure row from the left. Move to the right across the table until you read the flow closest to actual. Located directly under the flow rate is the appropriate manifold type, and located at the top of this column is the appropriate nozzle size. If you know the pressure and nozzle size, select the operating pressure row to the left, and read across the nozzle sizes in the top boxes until you get to the nearest nozzle size. The box where these two intersect will give the appropriate flow rate and manifold type.

		NOZZLE SIZE																		
		Nozzle Diameter	0.035	0.038	0.042	0.047	0.052	0.057	0.063	0.069	0.075	0.082	0.090	0.098	0.106	0.115	0.125	0.135	0.145	0.155	0.165
		Nozzle #	2	2.5	3	4	5	5.5	6.5	8	10	12	14	16	19	23	27	31	36	41	46
PRESSURE, PSI	2,000	FLOW, GPM	SPEED CONTROL IS LIMITED AT 2,000 PSI												26	30	34	39	43	47	51
		MANIFOLD													R150	R150	R150	R150	R150	R150	R150
	5,000	FLOW, GPM								18	22	26	30	35	41	47	54	61	68	75	
		MANIFOLD								R150	R150	R150	R90	R90	R90	R90	R50	R50	R50	R50	
	10,000	FLOW, GPM				12	15	17	22	26	30	36	42	50	57	66	76				
		MANIFOLD				R150	R150	R150	R90	R90	R90	R50	R50	R50	R50	R30	R30				
	15,000	FLOW, GPM		10	12	15	18	21	27	31	37	44	52	61	70	81					
		MANIFOLD		R150	R150	R150	R90	R90	R90	R50	R50	R50	R30	R30	R30	R30					
	20,000	FLOW, GPM	10	11	13	17	20	24	30	36	42	51	60	70	81						
		MANIFOLD	R150	R150	R150	R90	R90	R90	R50	R50	R50	R30	R30	R30	R30						

Maintenance:

The Torus 3D Tool is simple to operate, but some care is necessary for safe and productive use. Please read and follow all of these recommendations.

HIGH PRESSURE SEAL
The Torus has two high pressure seals, one in the inlet shaft, and one in the cross shaft. These seals are identical; they may leak water at low pressure (under 1000 psi) and will leak water continuously at operating pressure during failure. If water is leaking out of the weep holes closest to the inlet, the inlet seal is damaged. If the water is leaking out of the weep holes furthest from the inlet, the cross-shaft seal is damaged.

LUBRICATION AND STORAGE
It is recommended to grease the tool every 100 hours of operation. Any multi-purpose NLGI 2 grease is acceptable. There are five grease fittings located on the outside of the body. No damage will result from over-greasing the tool but the operator will likely see any extra grease leaking out around the shaft seals under operation. It is also recommended to blow out all internal water passages (nozzles, weep holes, inlet) with compressed air after each use to maximize the life of internal components.

MAGNETIC BRAKE
The magnetic brake requires no lubrication or maintenance. If a problem is suspected with the magnetic brake assembly, it should be sent to a certified StoneAge repair center for service or replacement.

THREADED HIGH PRESSURE CONNECTIONS
To avoid galling, for pipe thread connections use Parker Thread Mate È thread sealant (StoneAge part number GP047) and fluorocarbon tape. For all other threaded high pressure connections use anti-seize lubricant alone. StoneAge recommends Swagelok Blue Goop È (StoneAge part number GP 043).

THREADED FASTENERS
It is HIGHLY IMPORTANT that all threaded fasteners be reassembled per the following procedure: A) Fasteners labeled with a specific Blue Loctite (GP180) note are to be reassembled and torque as noted. B) All other fasteners are to be reassembled using Blue Goop È (GP 043) and torque if specified.

Description:

MANIFOLDS

There are four manifolds for the Torus; select the proper version for the operating conditions.

R30 50-80 GPM

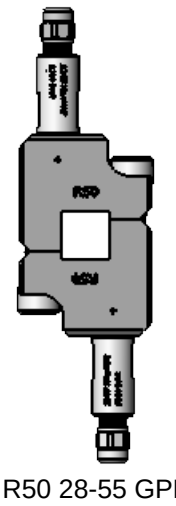

R50 28-55 GPM

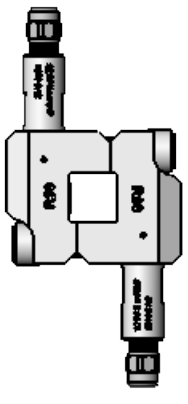

R90 16-30 GPM

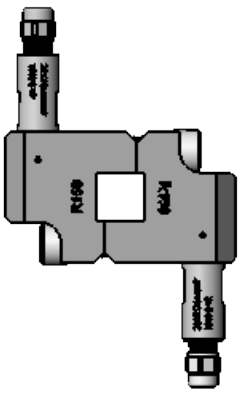

R150 10-18 GPM

INLET ADAPTERS

The inlet adapters are all female-female couplings. One end is an O-ring face seal that seals to the inlet shaft. The other end is available in 3/4" NPT, 1" NPT, 3/4" medium pressure or 1" medium pressure.

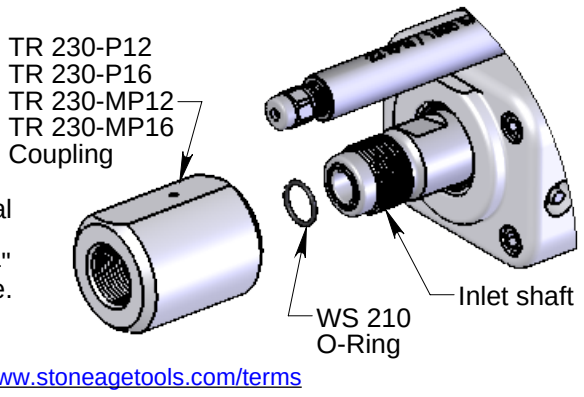

SPEED ADJUSTMENT

Note: It is not necessary to remove the optional Pulling Ring Assy to access the Speed Adjustment Knob.

The rotation speed of the Torus may be adjusted using the speed adjustment shaft located at the opposite end from the inlet. The shaft may be set at any location between slow and fast. Any suitable tool such as a phillips head screwdriver may be used to adjust the speed by inserting the tool thru the access slot on the housing and into the hole in the shaft. To change from slow to fast, turn the speed adjustment shaft approximately 50Áto the left. Marks are engraved on the outside of the body to indicate slow and fast settings. Changing the speed from slow to fast will increase speed by approx. three times (i.e. slow 10 rpm; fast 30 rpm). The rotational speed depends on the torque produced by the operating pressure, flow, manifold version and brake setting. The average operating speed range of the cross-shaft is approximately 8-16 rpm on slow and approximately 25-50 rpm on fast.

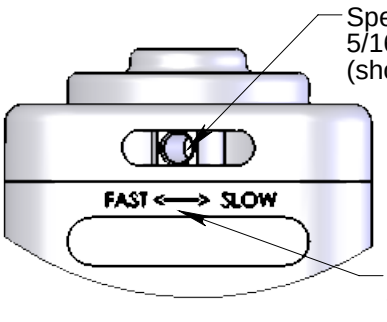

Speed Adjustment Shaft, 5/16" diameter hole for adjusting tool (shown in fast position)

Speed adjustment arrow for slow and fast settings.

For terms and conditions of sale see: http://www.stoneagetools.com/terms
For limited warranty see: http://www.stoneagetools.com/warranty
For applicable patents see: http://www.sapatents.com

PL 556 É 03/29/2018 StoneAgeÈ, All Rights Reserved

The Torus - 3D Tank CleaningTool

TR-130 ASSEMBLY

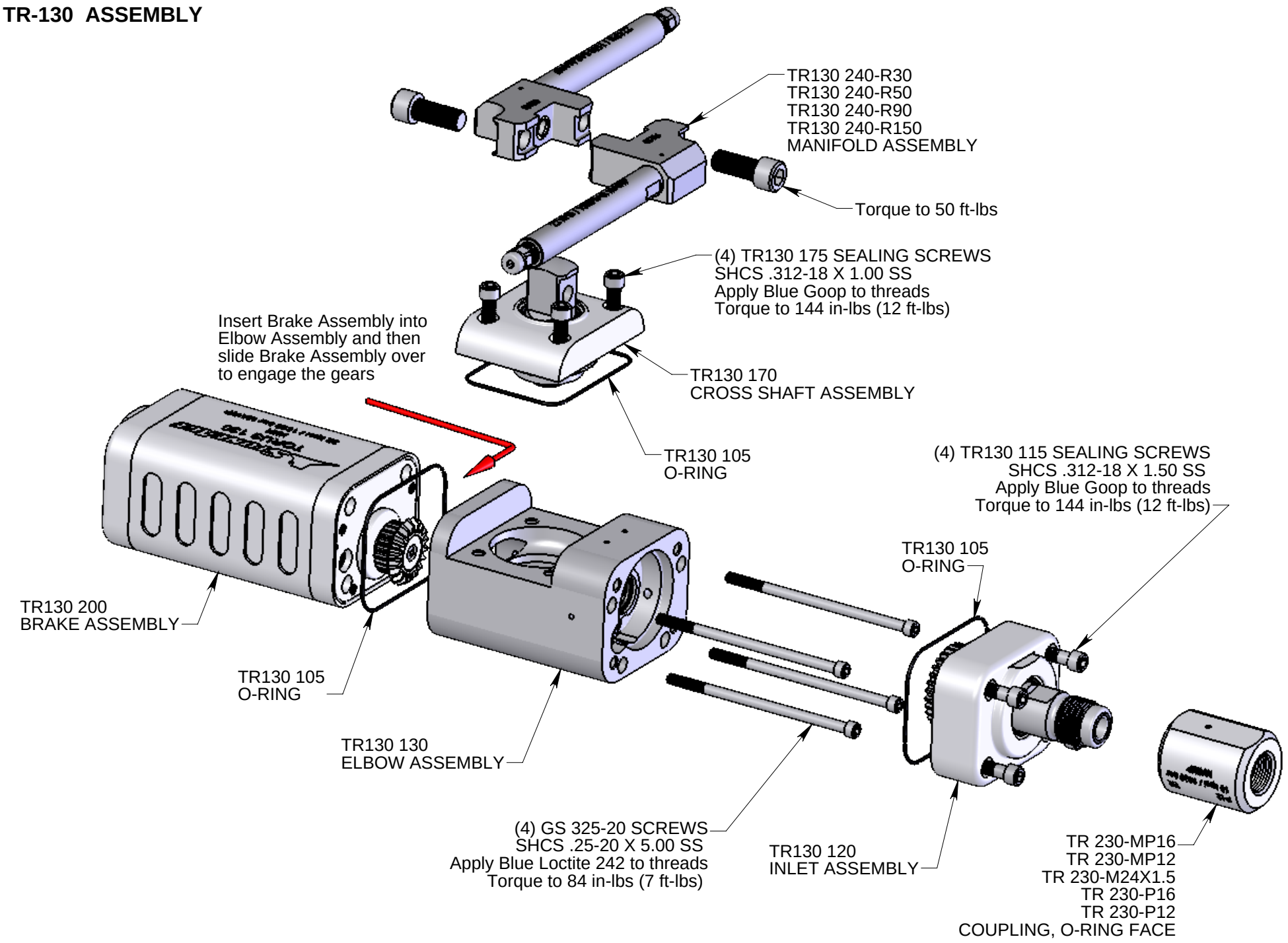

TR130 240-RXX-X MANIFOLD ASSEMBLY

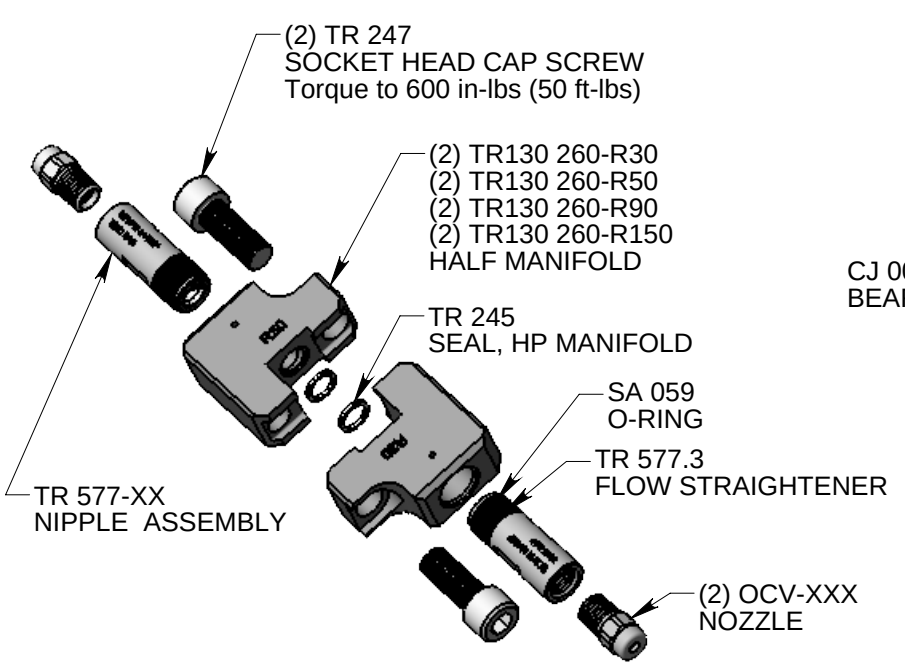

TR130 170 CROSS SHAFT ASSEMBLY

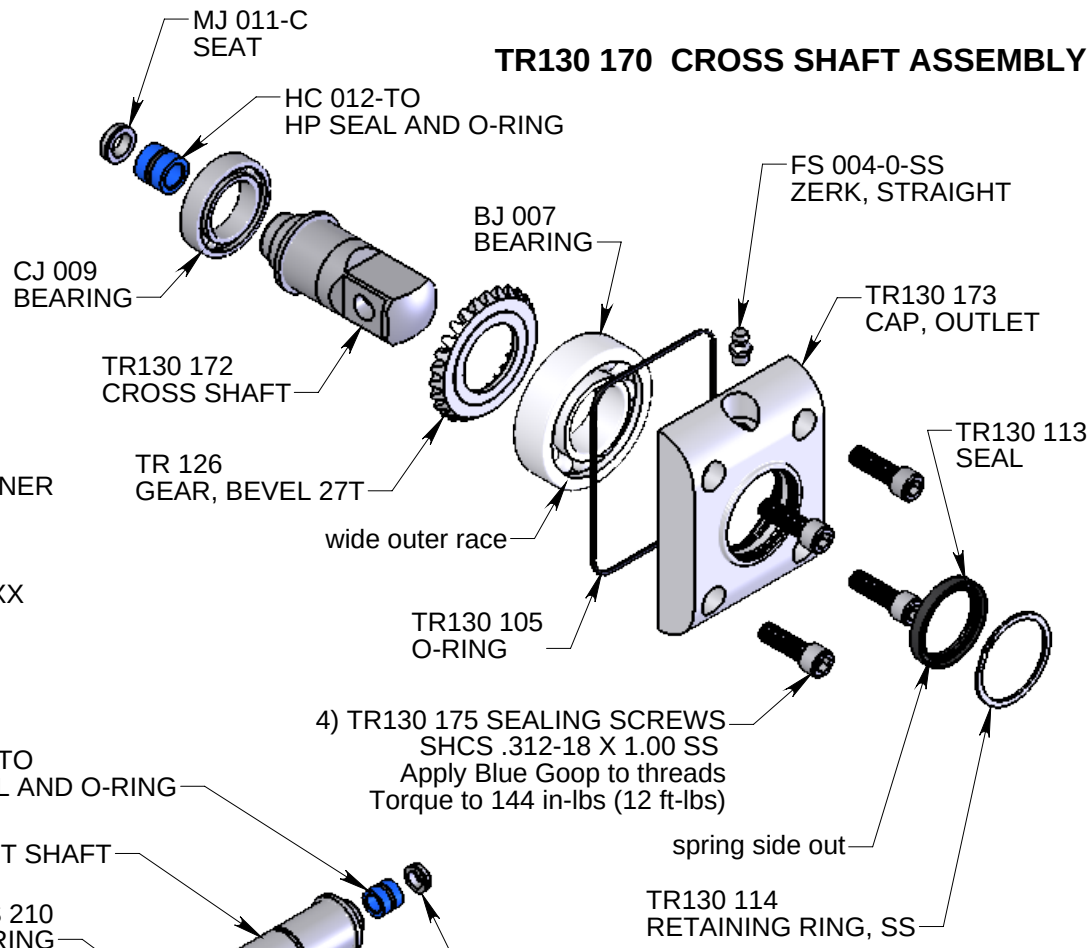

TR130 120 INLET ASSEMBLY

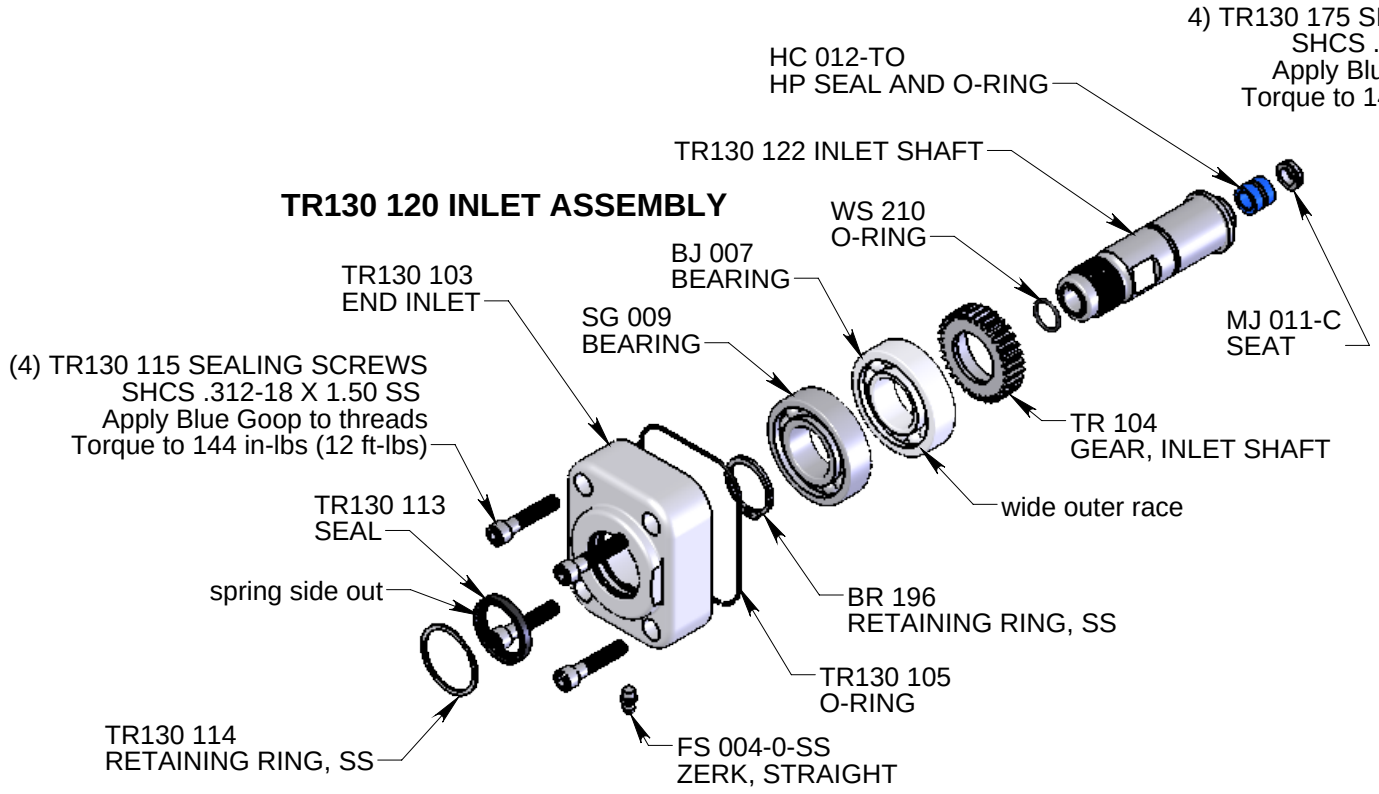

PL 556 É 03/29/2018 StoneAge, All Rights Reserved

The Torus® - 3D Tank Cleaning Tool

TR130 130 ELBOW ASSEMBLY

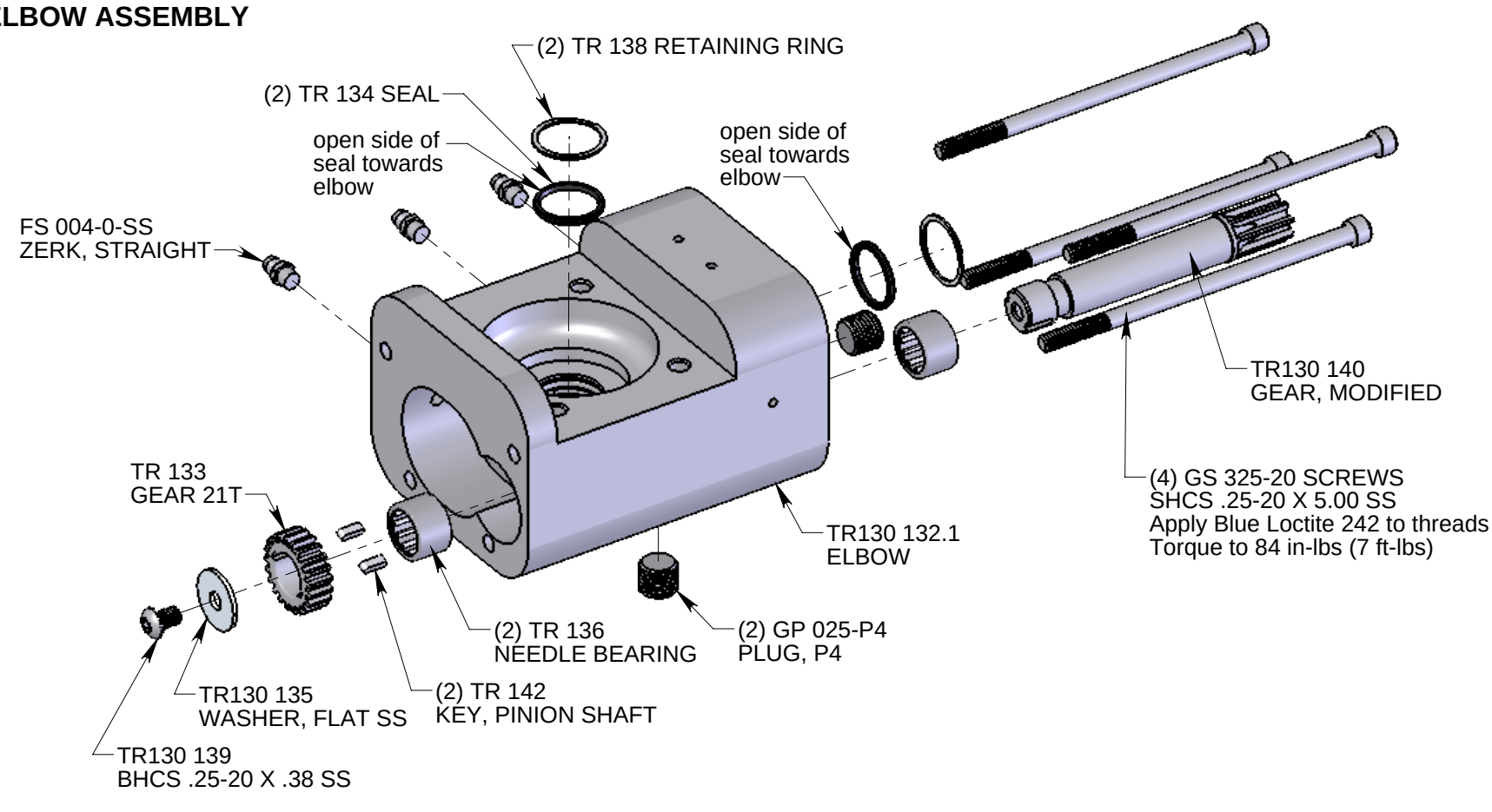

TR130 200 BRAKE ASSEMBLY

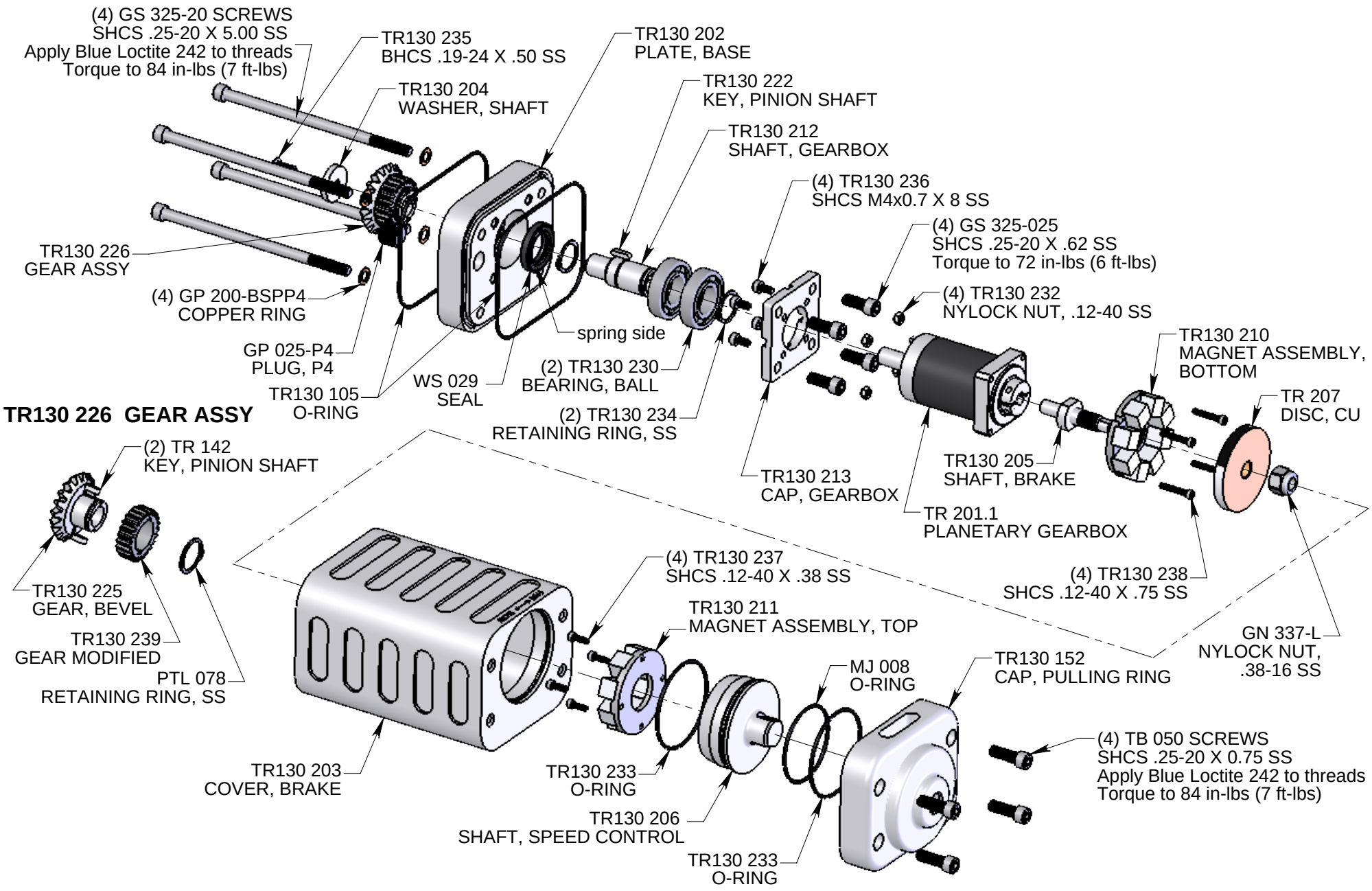

TORUS INSTALLATION IN TR130 408-SS CAGE

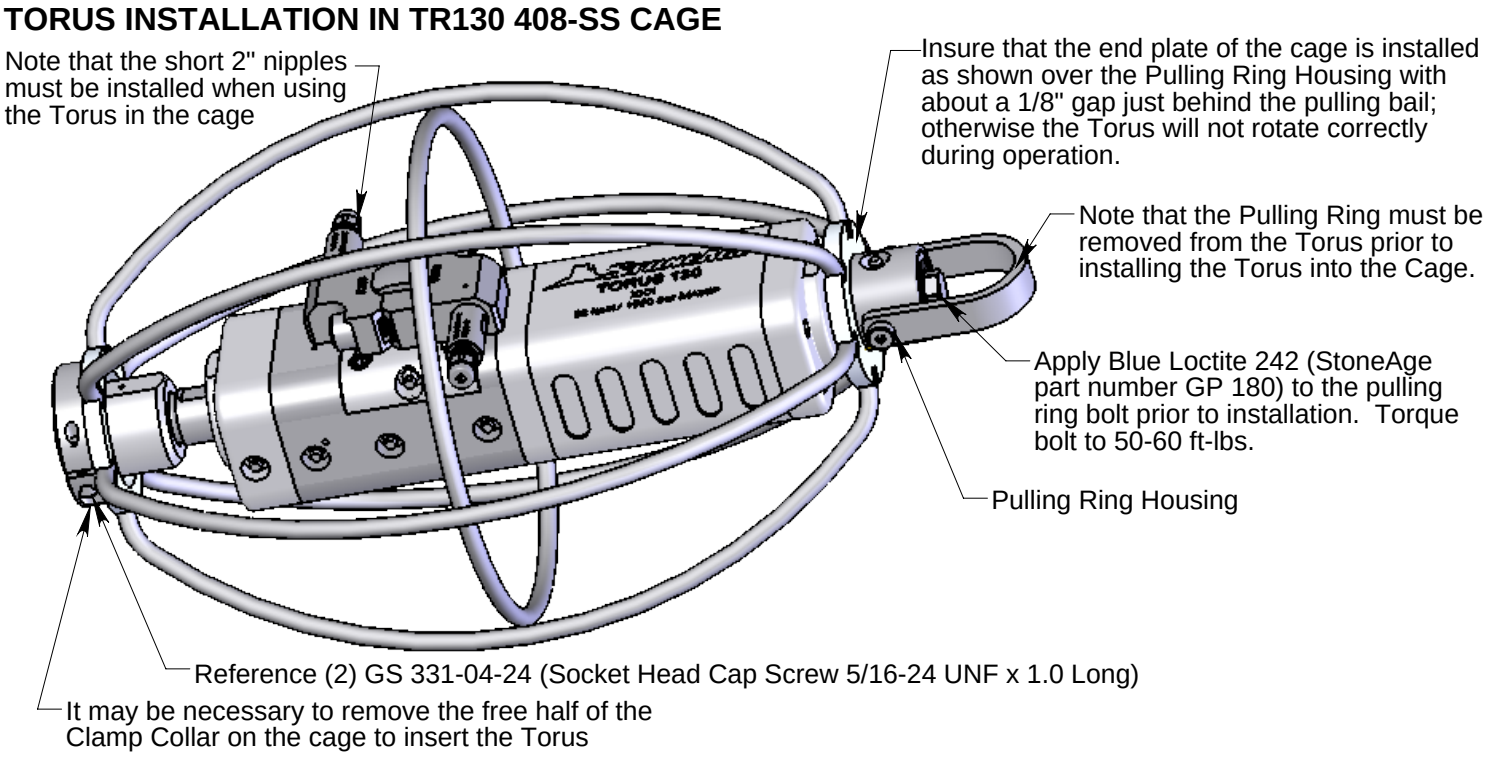

HC 090 PULLING RING INSTALLATION

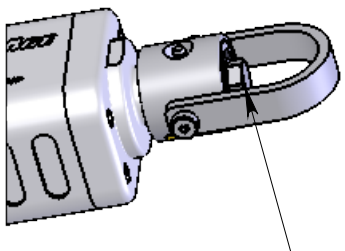

STONEAGE
ENGINEERING THE POWER OF WATER

PL 556 É 03/29/2018 StoneAge®, All Rights Reserved

The Torus™ - 3D Tank Cleaning Tool

TR-130 HIGH PRESSURE SEAL MAINTENANCE

The Torus has 2 high pressure seals. These seals may leak at tap pressure, but should seal at pressures above 1000 psi.

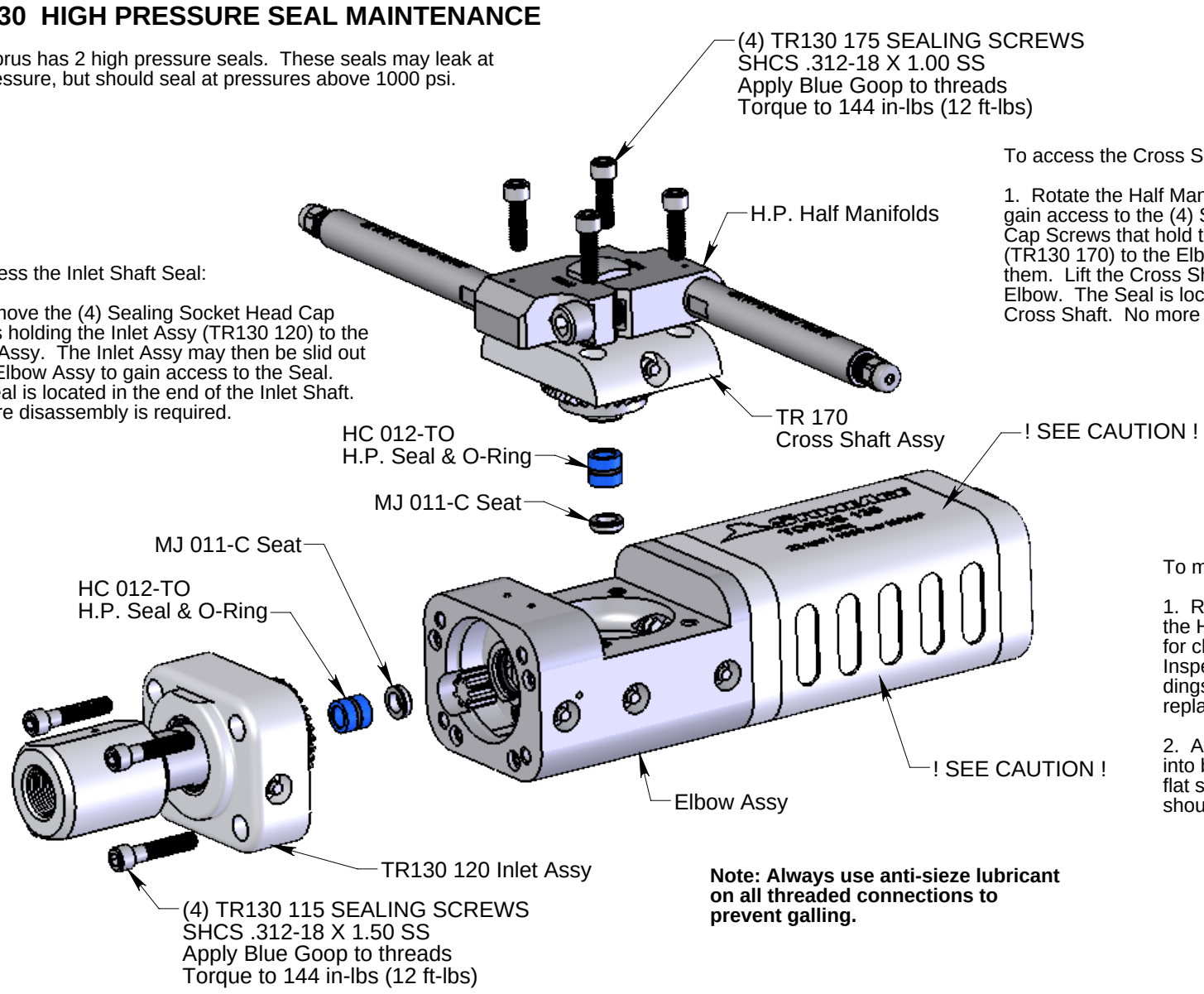

To access the Inlet Shaft Seal:

1. Remove the (4) Sealing Socket Head Cap Screws holding the Inlet Assy (TR130 120) to the Elbow Assy. The Inlet Assy may then be slid out of the Elbow Assy to gain access to the Seal. The Seal is located in the end of the Inlet Shaft. No more disassembly is required.

To access the Cross Shaft Seal:

1. Rotate the Half Manifolds as necessary to gain access to the (4) Sealing Socket Head Cap Screws that hold the Cross Shaft Assy (TR130 170) to the Elbow Assy and remove them. Lift the Cross Shaft Assy out of the Main Elbow. The Seal is located in the end of the Cross Shaft. No more disassembly is required.

To maintain H.P. Seat & Seal:

1. Remove the Carbide Seat (MJ 011-C) and the H.P. Seal (HC 012-TO). Inspect the Seat for chips on edges. Replace if damaged. Inspect the related face of the Elbow Assy for dings or pits. If damaged, it must be faced or replaced, otherwise the Seal will leak.

2. Apply grease to new H.P. Seal and install into bore. Place the Seat on the Seal with the flat side against the Seal. The chamfered side should face towards the Elbow Assy.

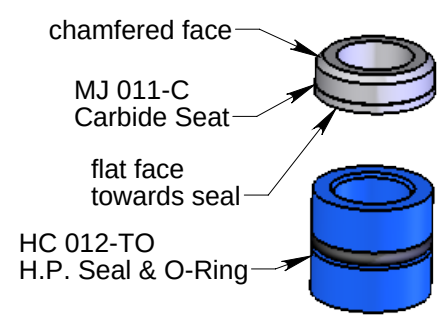

Note: Always use anti-sieze lubricant on all threaded connections to prevent galling.

Also grease the (5) Zerks on the Elbow, Inlet Housing & Cross Shaft Housing if necessary.

! CAUTION !: The use of gloves when handling the tool after operation is recommended as the body and brake cover at the pulling ring end may reach temperatures of up to 160ÁF depending on operating conditions.

TR130 600 Service Kit Contents

PART NUMBER	DESCRIPTION	QUANTITY
GP 043	Blue Goop È 2oz	1
GP 180	Blue Loctite 242 È .02oz	1
HC 012-TO	High Pressure Seal w/ O-Ring	2
MJ 011-C	High Pressure Seat	2
PL 556	TR-130 Manual Insert	1
SA 059	O-Ring, G12	2
TR 245	High Pressure Seal, Manifold	2
WS 210	O-Ring	1

TR130 610 Overhaul Kit Contents

PART NUMBER	DESCRIPTION	QUANTITY
BJ 007	Bearing, Angular Contact	2
BR 196	Retaining Ring, SS	1
CJ 009	Bearing, Ball	1
GP 043	Blue Goop È 2oz	1
GP 180	Blue Loctite 242 È .02oz	1
HC 012-TO	High Pressure Seal w/ O-Ring	2
MJ 008	O-Ring, Brake	1
MJ 011-C	High Pressure Seat	2
PL 556	TR-130 Manual Insert	1
PTL 078	Retaining Ring, SS	1
SA 059	O-Ring, G12	2
SG 009	Bearing, Ball	1
TR130 105	O-Ring, Body	4
TR130 113	Seal	2
TR130 114	Retaining Ring, SS	2
TR130 230	Bearing, Ball	2
TR130 233	O-Ring, Brake	2
TR130 234	Retaining Ring, SS	2
TR 134	Seal	2
TR 136	Needle Bearing	2
TR 138	Retaining Ring, SS	2
TR 245	Seal, High Pressure Manifold	2
WS 029	Seal	1
WS 210	O-Ring	1

ENGINEERING THE POWER OF WATER
PL 556 É 03/29/2018 StoneAge™, All Rights Reserved