Spincat SC-287 Swivel

Description:

The **Spincat** is a self-rotating swivel designed for coil tubing well service. The powerful rotating jets cover a large area for efficient cleaning. Jet reaction force powers rotation of the head. An internal centrifugal speed control maintains rotation speeds of 80 to 150 rpm. The Spincat uses a high viscosity synthetic gear oil for lubrication,such as Texaco Pinnacle 220, Chevron HiPerSyn 220 or equivalent. The oil is available from StoneAge as part number SC250 048.

The tool has a straight flow-through design with a leak-free high pressure seal so pump power is not wasted. It has a 2-3/8 P.A.C. box inlet thread. The tool can be used at temperatures up to 200ÁC, and can be used with up to 30% HCL and Nitrogen injection. (Note: if used with HCL, flush tool with clean water after use.)

If the Spincat will be used with high external borehole pressures, make certain that the body of the tool is completely full of lubricating fluid; air pockets are compressible and this could lead to oil seal failure and loss of lubrication.

The Spincat can be used at operating pressures of 1000 to 5000 psi and flow rates of 1 to 3 bpm (40 to 120 gpm) with standard head porting. Custom porting can be ordered for use up to 5 bpm (200 gpm).

The standard nozzle head has five ports with 1/8 npt threads; one at 15 degrees forward, two at 45 degrees forward and two at 90 degrees to the axis of rotation. Some of the ports may be plugged in a balanced pattern to concentrate the flow in a particular direction. Alternate head porting patterns may be added to the same head to accommodate different flow rates.

Troubleshooting:

If the head will not rotate when at operating conditions, check head by hand to make sure it rotates freely. If it does not rotate freely by hand, the tool needs to be disassembled and repaired.

If the head rotates freely by hand, check the jet sizes and calculate pressure loss thru the coil tubing and check with your distributor or StoneAge to make certain there is enough jet torque to provide rotation.

If the head rotates too fast, clean out old lubricating fluid and replace with fresh lubricant.

Maintenance:

The Spincat uses synthetic gear oil for a lubricant. To top off the tool with lubricant, follow steps below. If the tool is being rebuilt or the seal replaced, the lubricant may be poured directly into the body around the shaft before the inlet nut is installed. Once the inlet nut is installed, it is recommended to use the syringe with the port screw ports to completely remove all air bubbles. To replace the high pressure seal, follow the steps on the right.

1. Remove both Port Screws (BJ 026).
2. Fill the syringe (BC 410) with lubricant.
3. Thread the syringe into one of the two ports.
4. Hold the tool at an angle so the port with the syringe is lower.
5. Squeeze fluid into the tool until all air bubbles stop coming out.
6. Remove syringe, install Port Screws.

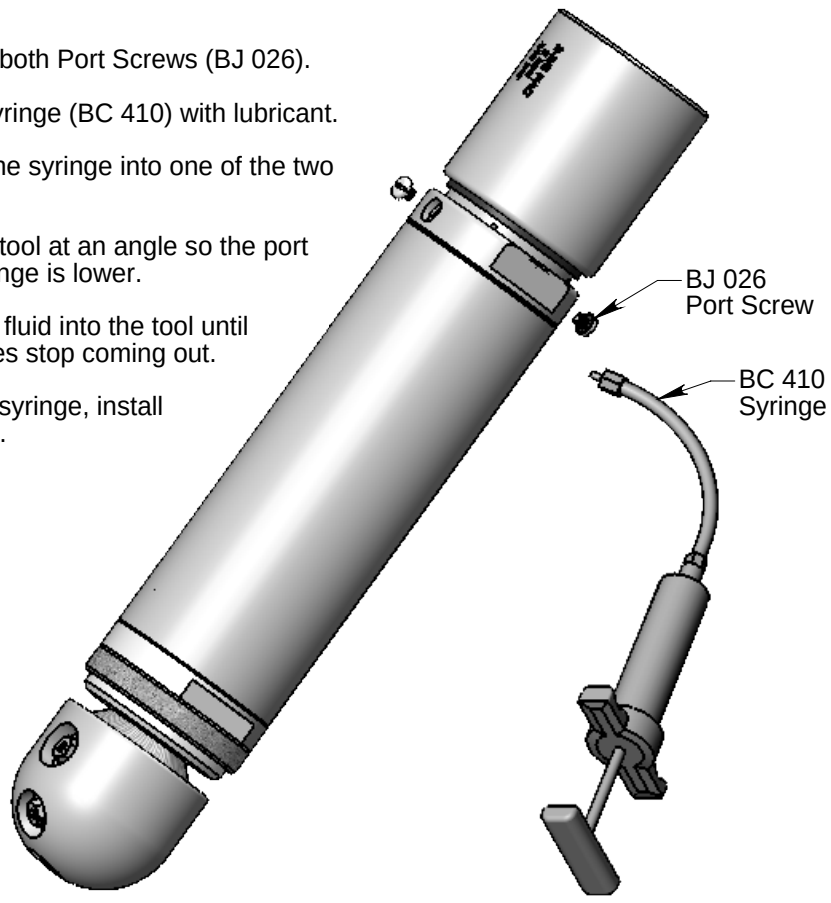

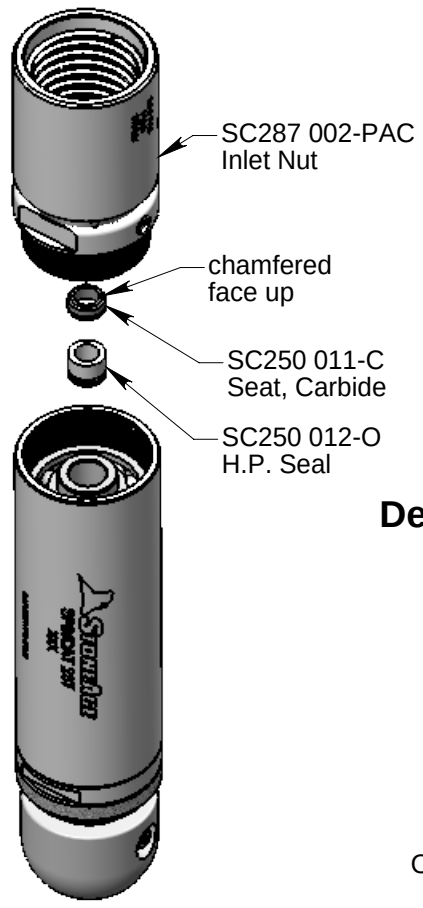

To replace the high pressure seal:

1. Unscrew the Inlet Nut (SC287 002-PAC).
2. Remove the old Seat (SC250 011-C) and H.P. Seal (SC250 012-O).
3. Apply grease to and install new H.P. Seal into the shaft with the O-Ring groove end going in first.
4. Install new Seat (SC250 011-C) with the chamfered face toward Inlet Nut.
5. Thread Inlet Nut into Body; tighten to 50 ft-lb.

Detail View of Seat & H.P. Seal

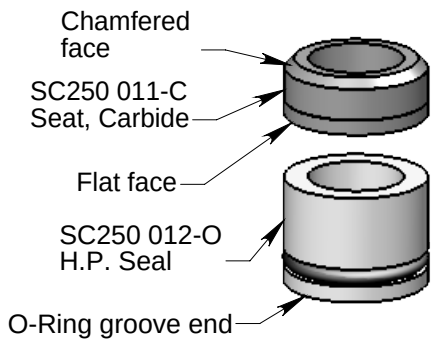

Available Maintenance Kits:

SC287 600 Service Kit (Includes items needed for maintenance)
SC287 602 Seal Kit (Includes parts needed for one seal change)
SC287 610 Overhaul Kit (Includes parts needed for tool rebuild)
SC287 612 Tool Kit (Includes tools to aid assembly)

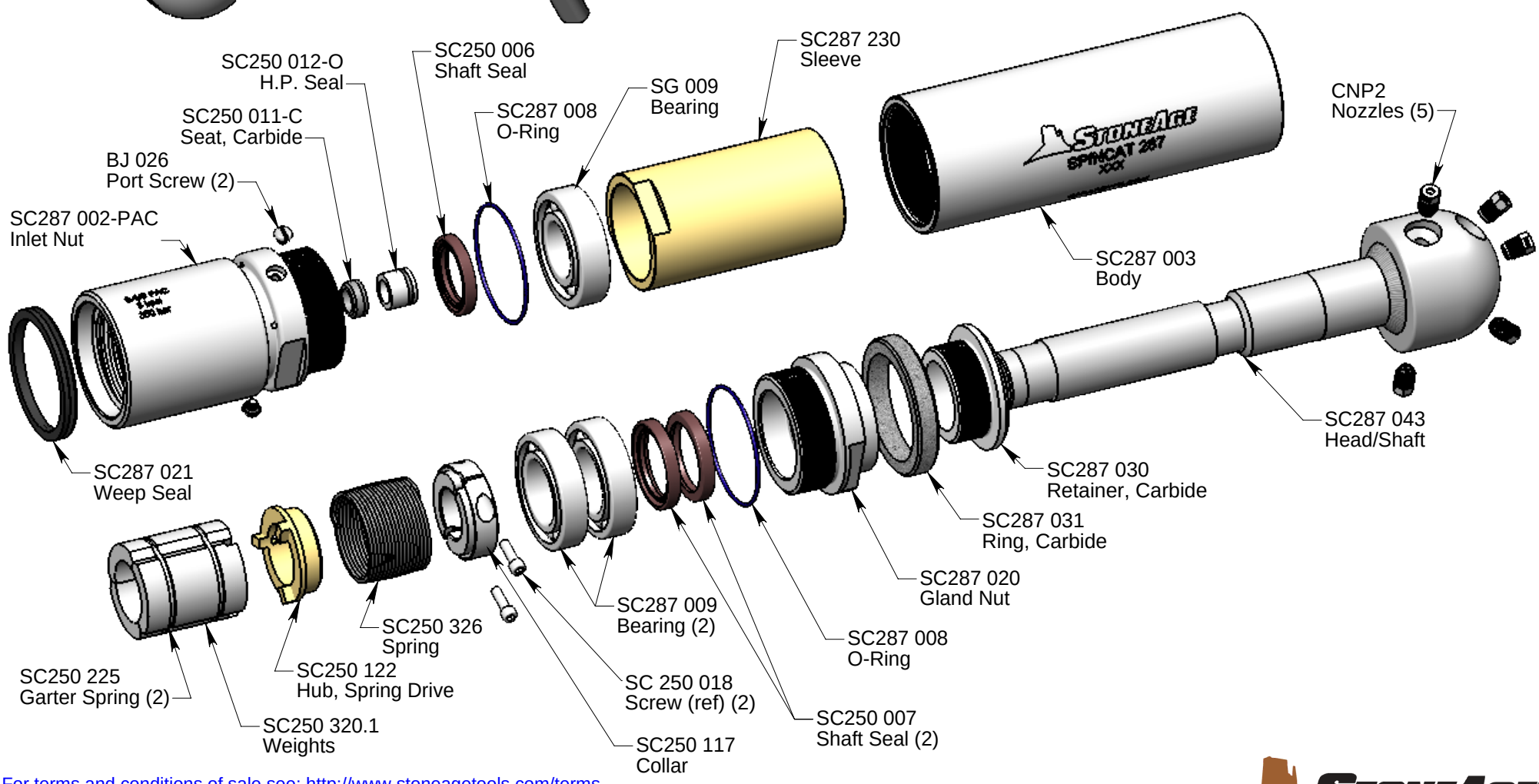

For terms and conditions of sale see: http://www.stoneagetools.com/terms
For limited warranty see: http://www.stoneagetools.com/warranty
For applicable patents see: http://www.sapatents.com

Spincat SC-287 Swivel

Disassembly:

1. Unscrew the Inlet Nut (SC287 002-PAC) from the Body.

2. Remove the Seat (SC250 011-C) and H.P. Seal (SC250 012-O) from the bore of the Shaft.

3. Remove the Shaft Seal (SC250 006) from the Inlet Nut if it is damaged and needs replacing.

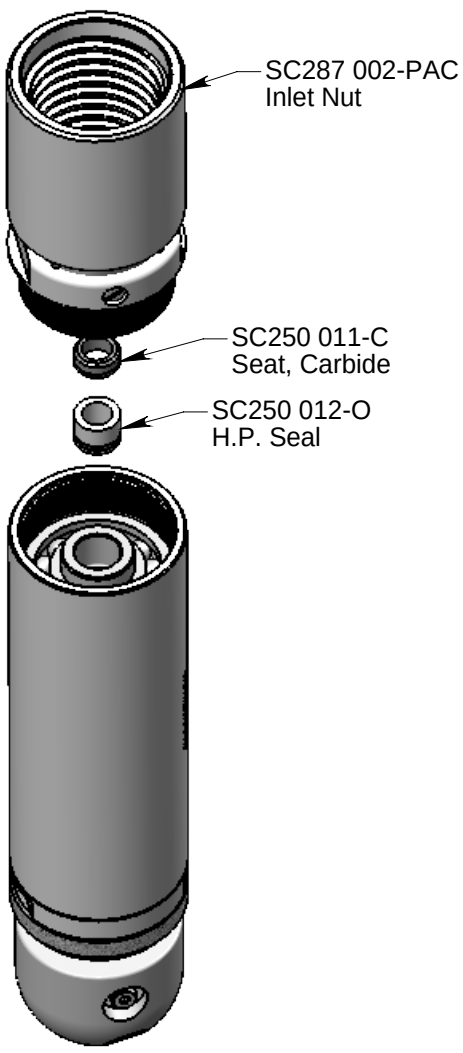

4. Unscrew the Body (SC287 003) from the Gland Nut (SC287 020).

5. Pull off Bearing (SG 009) from Shaft; remove the Sleeve (SC287 230).

6. Lift off Weights (SC250 320), Hub (SC250 122) and Spring (SC250 326).

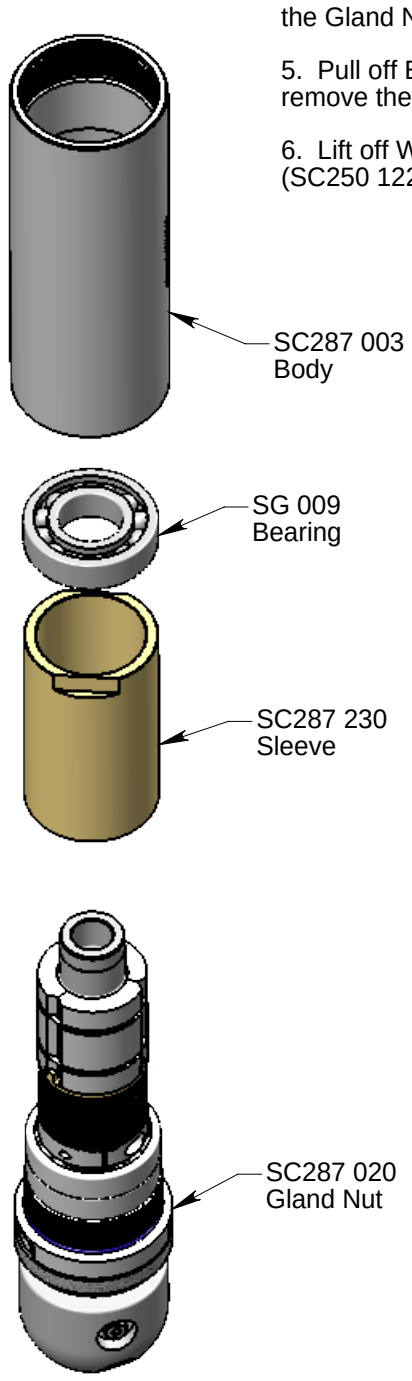

7. Remove Collar (SC250 117) from Shaft.

8. Press off Bearings (SC287 009); remove Gland Nut (SC287 020). It is not necessary to separate the Carbide Retainer (SC287 030) or the Carbide Ring (SC287 031) from the Gland Nut.

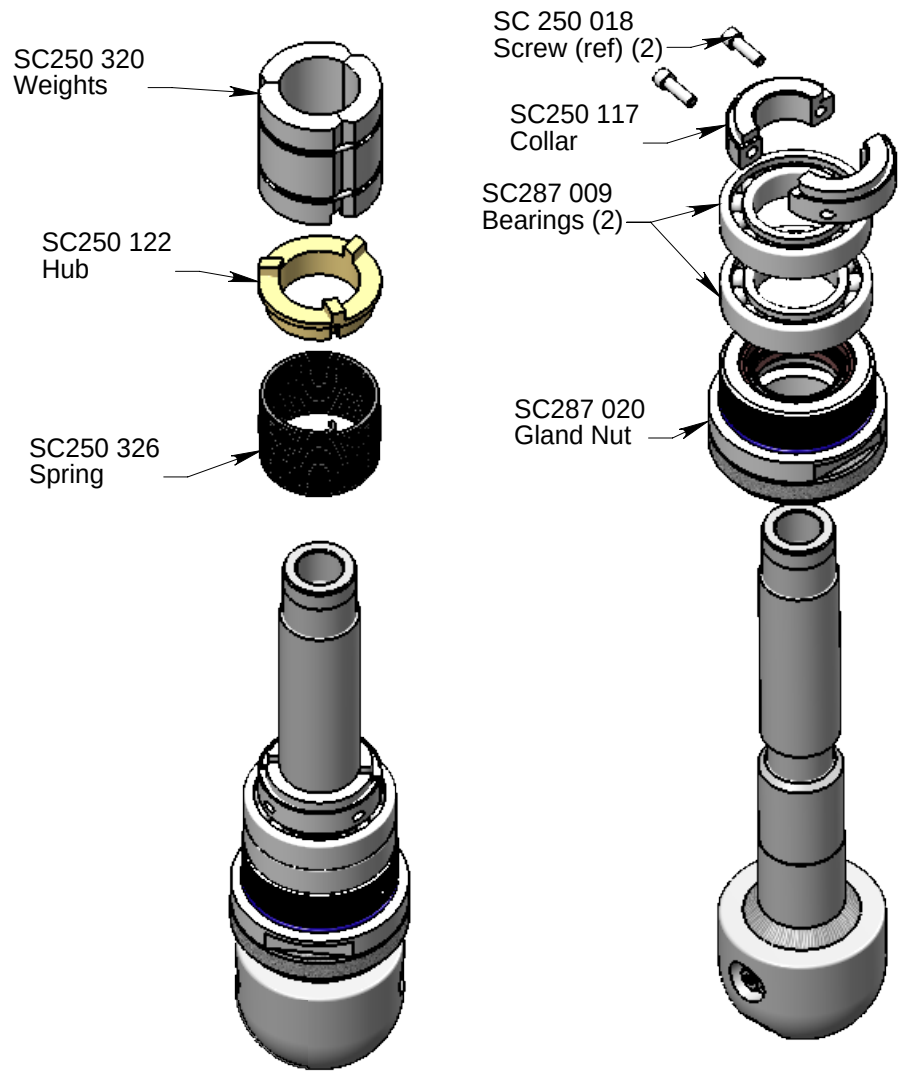

Assembly:

1. If necessary, install Carbide Ring (SC287 031) and Carbide Retainer (SC287 030) onto Gland Nut using Loctite Blue #242.

2. Install Shaft Seals (SC250 007) in Gland Nut (SC287 020) as shown.

3. Install O-Ring (SC287 008) over threads of Gland Nut.

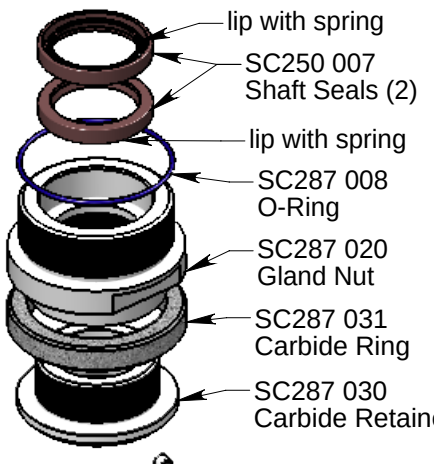

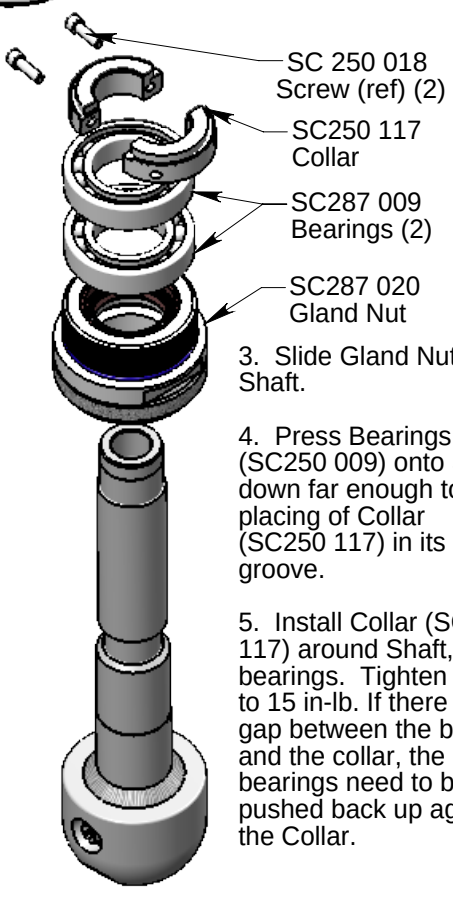

3. Slide Gland Nut onto Shaft.

4. Press Bearings (SC250 009) onto Shaft, down far enough to allow placing of Collar (SC250 117) in its groove.

5. Install Collar (SC250 117) around Shaft, above bearings. Tighten screws to 15 in-lb. If there is a gap between the bearings and the collar, the bearings need to be pushed back up against the Collar.

6. Place Spring (SC250 326) over Shaft; tang on Spring fits into slot between Collar Halves.

7. Install Hub (SC250 122); tang on Spring should go into one slot on Hub.

8. Install Weights (SC250 320).

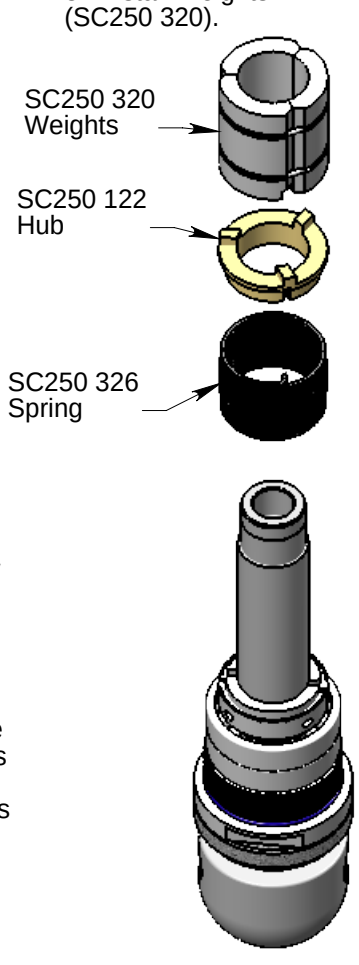

9. Install Sleeve (SC287 230).

10. Install Bearing (SG 009) over Shaft, down against Sleeve.

11. Thread Body (SC287 003) onto Gland Nut.

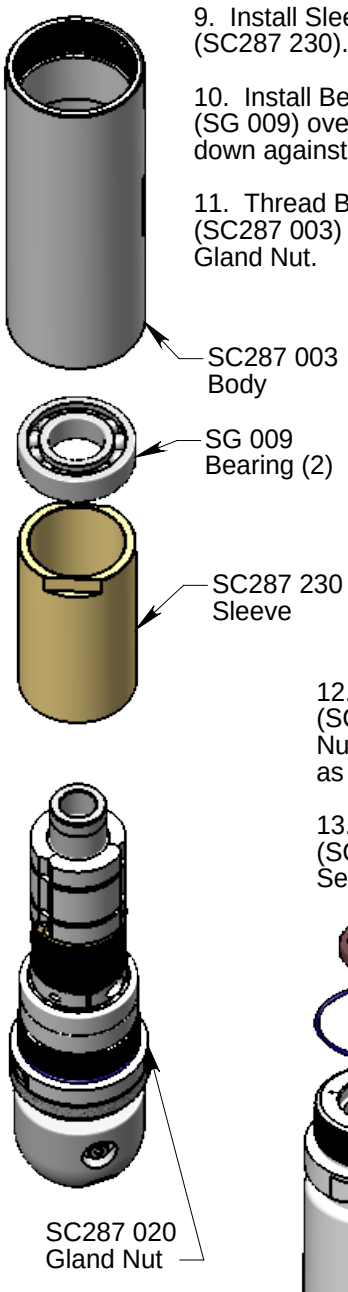

12. Install Shaft Seal (SC250 006) in Inlet Nut (SC287 002-PAC) as shown.

13. Install O-Ring (SC287 008) and Weep Seal (SC287 021).

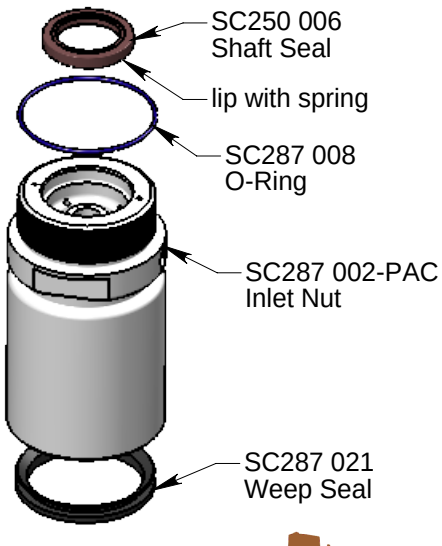

14. Install H.P. Seal (SC250 012-O) and Seat (SC250 011-C) as shown in the Maintenance Section.

15. Pour lubricating fluid into Body until completely filled, allow time for air to bubble out. Install Inlet Nut into Body. Tighten Inlet Nut to 50 ft-lb.

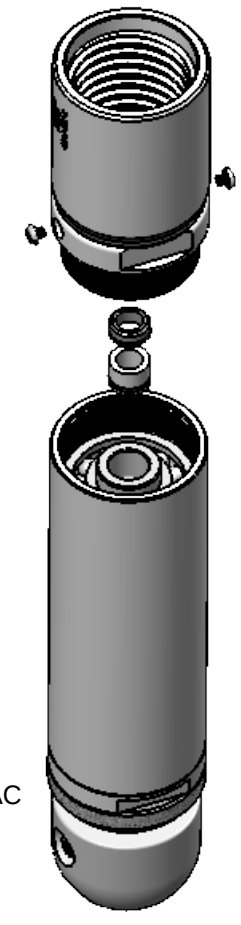

STONEAGE
ENGINEERING THE POWER OF WATER

PL 542 É 06/14/2017 StoneAge, All Rights Reserved