Spincat SC-212 Swivel

Description:

The **Spincat** is a self-rotating swivel designed for coil tubing well service. The powerful rotating jets cover a large area for efficient cleaning. Jet reaction force powers rotation of the head. An internal centrifugal speed control maintains rotation speeds of 80 to 150 rpm. The Spincat uses a high viscosity synthetic gear oil for lubrication,such as Texaco Pinnacle 220, Chevron HiPerSyn 220 or equivalent. The oil is available from StoneAge as part number SC250 048.

The tool has a straight flow-through design with a leak-free high pressure seal so pump power is not wasted. It has a 1-1/2 AMMT box inlet thread. The tool can be used at temperatures up to 200ÁC, and can be used with up to 30% HCL and Nitrogen injection. (Note: if used with HCL, flush tool with clean water after use.)

If the Spincat will be used with high external borehole pressures, make certain that the body of the tool is completely full of lubricating fluid; air pockets are compressible and this could lead to oil seal failure and loss of lubrication.

The Spincat can be used at operating pressures of 1000 to 5000 psi and flow rates of 0.8 to 2 bpm (32 to 80 gpm).

The standard nozzle head has five ports with 1/8 npt threads; one at 15 degrees forward, two at 45 degrees forward and two at 90 degrees to the axis of rotation. Some of the ports may be plugged in a balanced pattern to concentrate the flow in a particular direction. Alternate head porting patterns may be added to the same head to accommodate different flow rates.

Troubleshooting:

If the head will not rotate when at operating conditions, check head by hand to make sure it rotates freely. If it does not rotate freely by hand, the tool needs to be disassembled and repaired.

If the head rotates freely by hand, check the jet sizes and calculate pressure loss thru the coil tubing and check with your distributor or StoneAge to make certain there is enough jet torque to provide rotation.

If the head rotates too fast, clean out old lubricating fluid and replace with fresh lubricant.

Maintenance:

The Spincat uses synthetic gear oil for a lubricant. To top off the tool with lubricant, follow steps below. If the tool is being rebuilt or the seal replaced, the lubricant may be poured directly into the body around the shaft before the inlet nut is installed. Once the inlet nut is installed, it is recommended to use the syringe with the port screw ports to completely remove all air bubbles. To replace the high pressure seal, follow the steps on the right.

1. Remove both Port Screws (BJ 026).
2. Fill the syringe (BC 410) with lubricant.
3. Thread the syringe into one of the two ports.
4. Hold the tool at an angle so the port with the syringe is lower.
5. Squeeze fluid into the tool until all air bubbles stop coming out.
6. Remove syringe, install Port Screws.

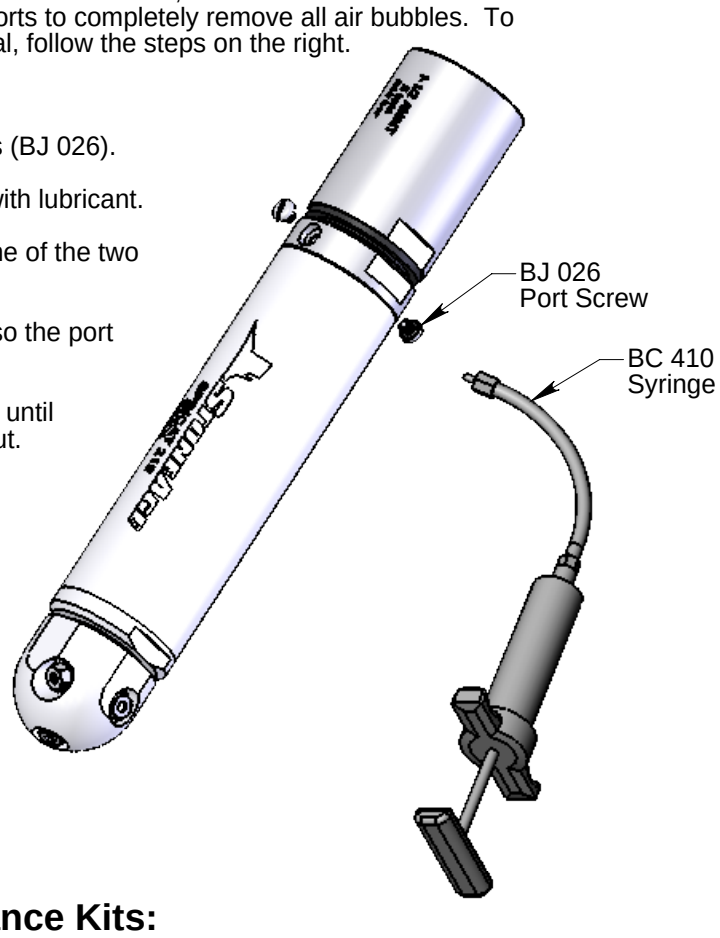

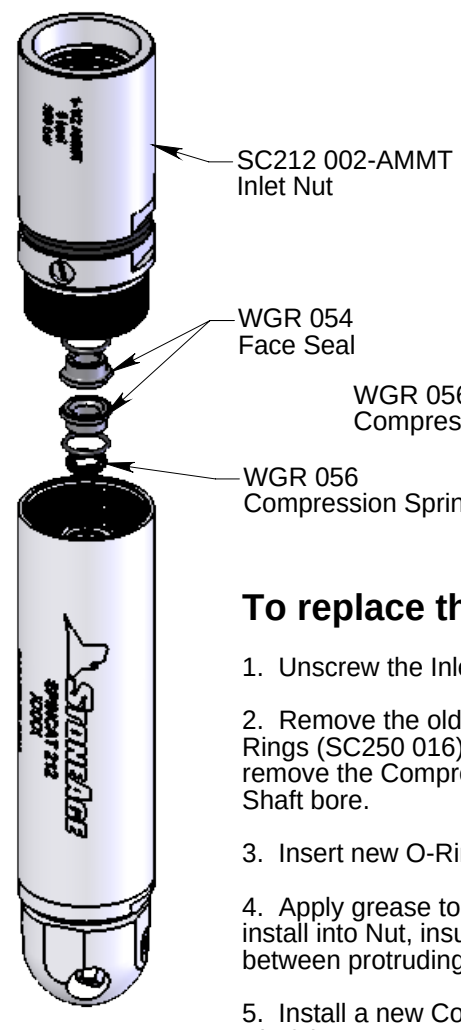

Detailed View of Seal

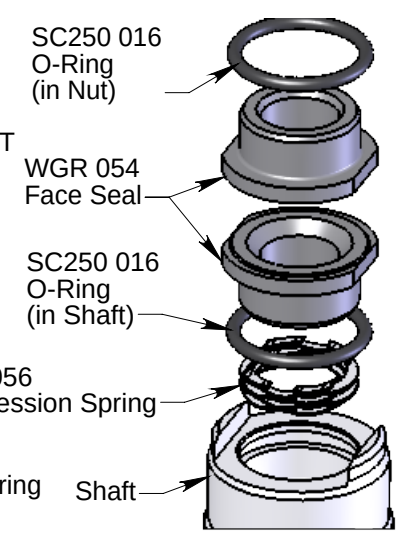

To replace the high pressure seal:

1. Unscrew the Inlet Nut (SC212 002-AMMT).
2. Remove the old Face Seals (WGR 054) and O-Rings (SC250 016) from the Nut and the Shaft. Also remove the Compression Spring (WGR 056) from the Shaft bore.
3. Insert new O-Ring (SC250 016) into groove in Nut.
4. Apply grease to smaller OD of new Face Seal and install into Nut, insuring that the flat sides slide down between protruding tangs on Nut.
5. Install a new Compression Spring (WGR 056) into Shaft bore.
6. Insert new O-Ring (SC250 016) into groove in Shaft.
7. Apply grease to smaller OD of new Face Seal and install into Shaft, checking to insure the flat sides slide down between protruding tangs on Shaft.
8. Thread Inlet Nut into Body; tighten to 50 ft-lb.

Available Maintenance Kits:

SC212 600 Service Kit (Includes items needed for maintenance)
SC212 602 Seal Kit (Includes parts needed for one seal change)
SC212 610 Overhaul Kit (Includes parts needed for tool rebuild)

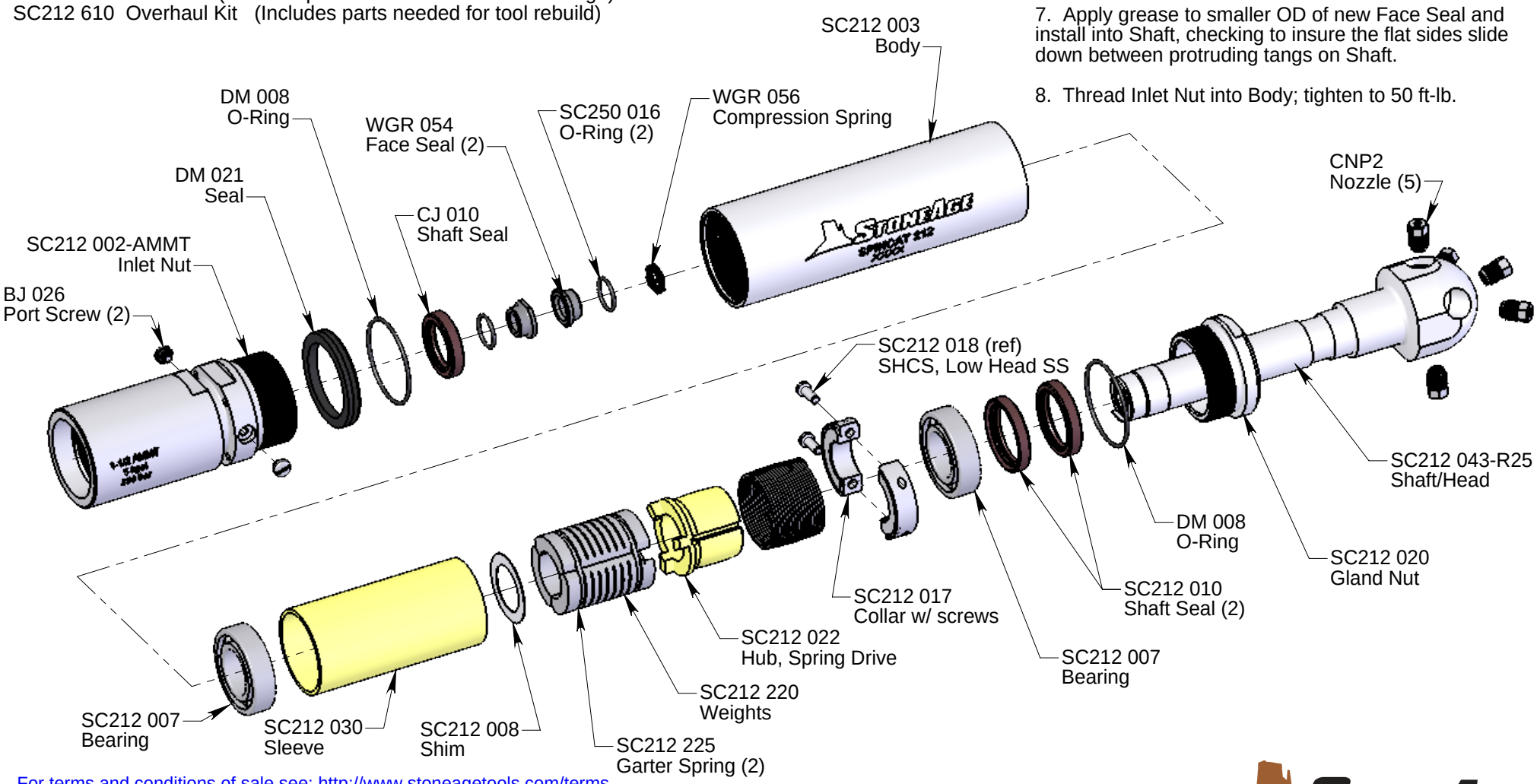

For terms and conditions of sale see: http://www.stoneagetools.com/terms
For limited warranty see: http://www.stoneagetools.com/warranty
For applicable patents see: http://www.sapatents.com

PL 545 É 06/14/2017 StoneAgeÉ, All Rights Reserved

Spincat SC-212 Swivel

Disassembly:

1. Unscrew the Inlet Nut (SC212 002-AMMT) from the Body.

2. Remove the Face Seals (WGR 054), O-Rings (SC250 016) and Compression Spring (WGR 056) from the Nut and the bore of the Shaft.

3. Remove the Shaft Seal (CJ 010) from the Inlet Nut if it is damaged and needs replacing.

4. Unscrew the Body (SC212 003) from the Gland Nut (SC212 020).

5. Pull off Bearing (SC212 007) from Shaft; remove the Sleeve (SC212 030).

6. Remove Shim (SC212 008), Weights (SC212 030), Hub (SC212 022) and Spring (SC212 025) from the Shaft.

7. Remove Collar (SC212 017) from Shaft.

8. Press off Bearing (SC212 007); remove Gland Nut (SC212 020).

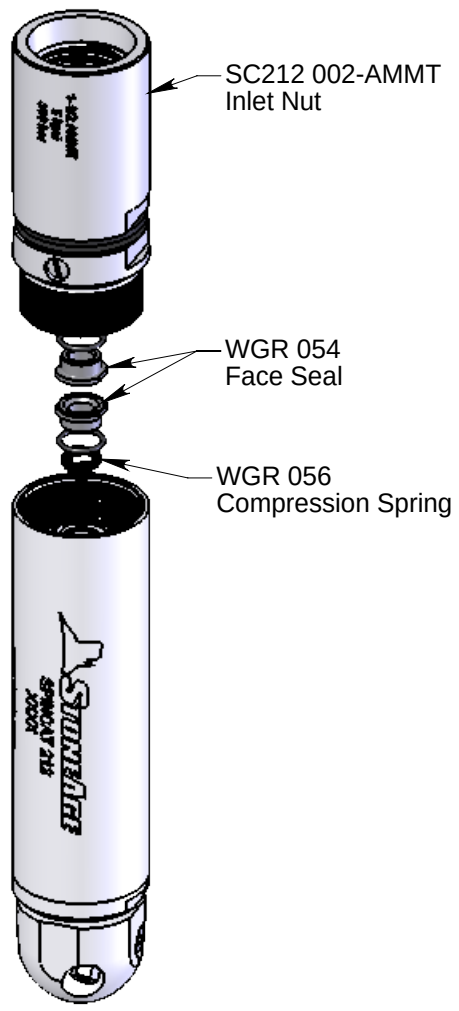

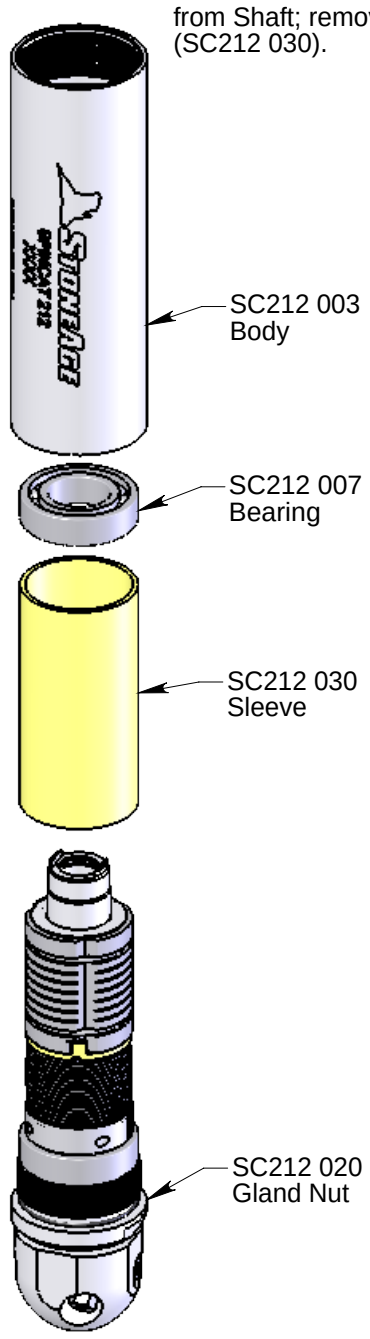

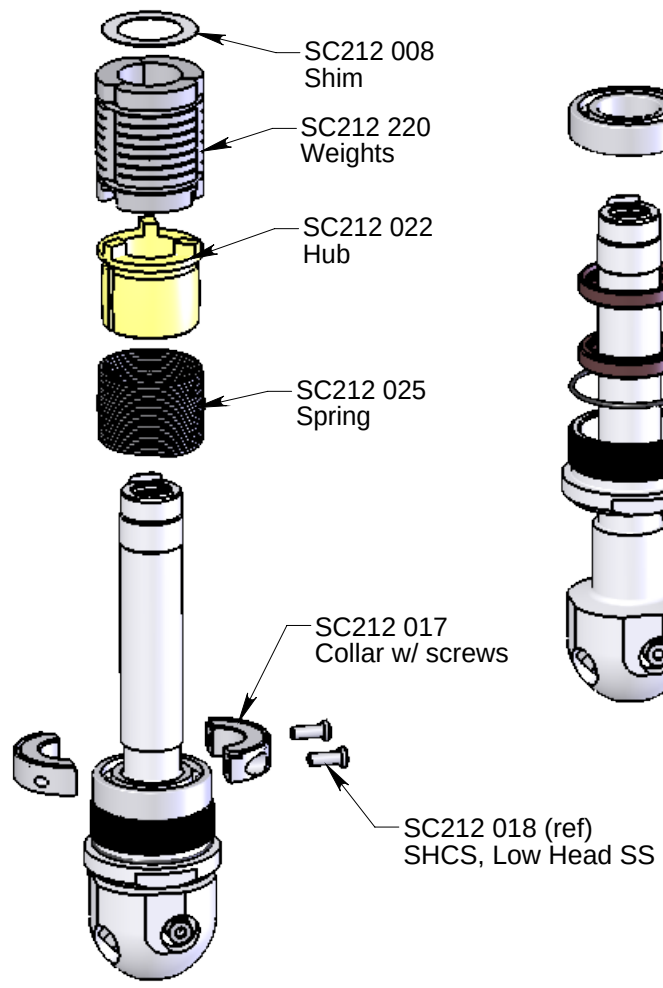

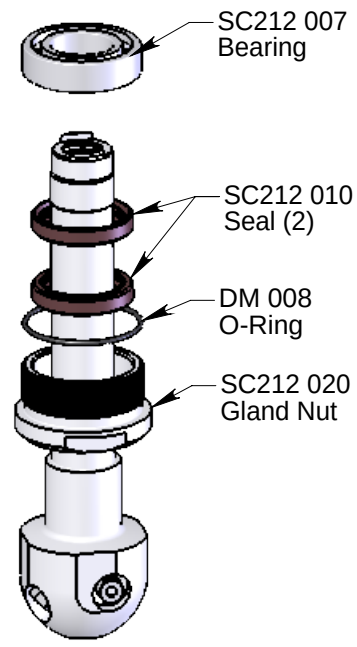

Assembly:

1. Install Shaft Seals (SC212 010) in Gland Nut (SC212 020) as shown.

2. Install O-Ring (DM 008) over threads of Gland Nut.

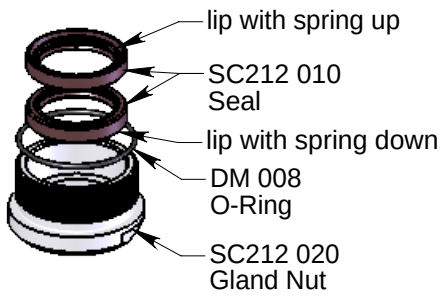

3. Slide Gland Nut onto Shaft.

4. Press Bearing (SC212 007) onto Shaft, down far enough to allow placing of Collar (SC212 017) in its groove.

5. Install Collar (SC212 017) around Shaft, above bearing. If there is a gap between the bearing and the collar, the collar needs to be pushed down against the Bearing. Tighten screws to 15 in-lb.

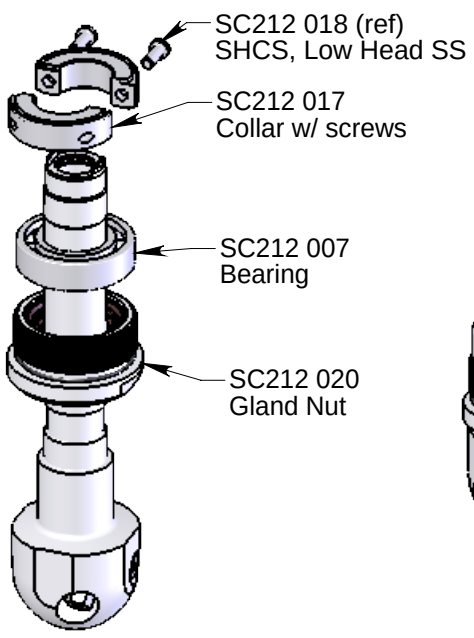

6. Place Spring (SC212 025) over Shaft; tang on Spring fits into slot between Collar Halves.

7. Install Hub (SC212 022); tang on Spring should go into slot on Hub.

8. Install Weights (SC212 220) and Shim (SC212 008).

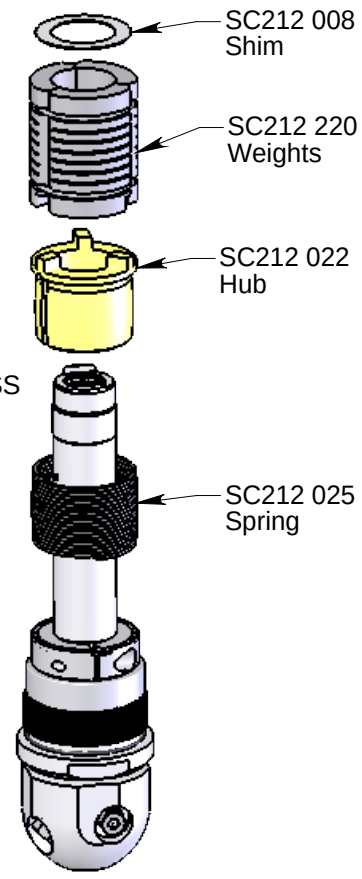

9. Install Sleeve (SC212 230).

10. Install Bearing (SC212 007) over Shaft, down against Sleeve.

11. Apply anti-sieze to threads on Gland Nut and thread Body (SC212 003) onto Gland Nut.

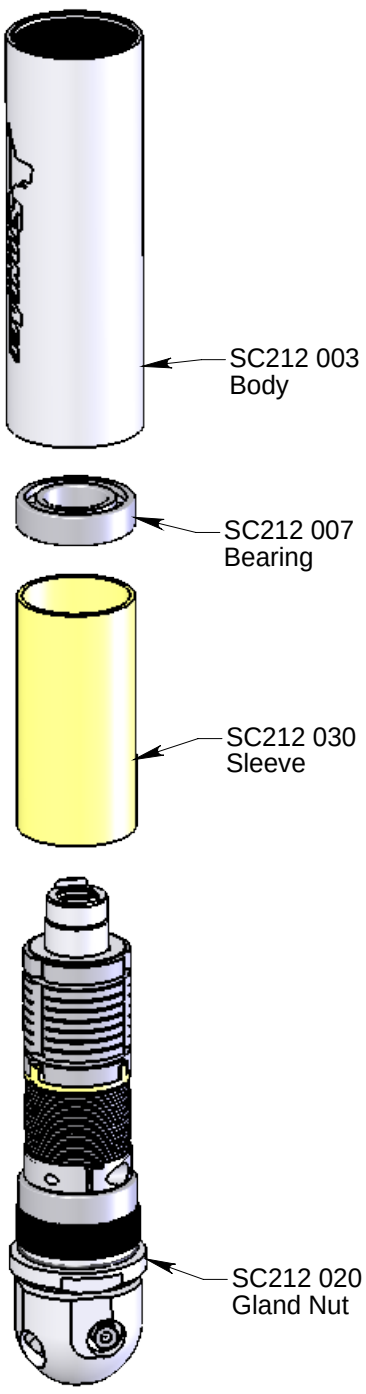

12. Install Shaft Seal (CJ 010) in Inlet Nut (SC212 002-AMMT) as shown.

13. Install O-Ring (DM 008) over threads on Nut; install Weep Seal (DM 021) into groove on outside of Nut.

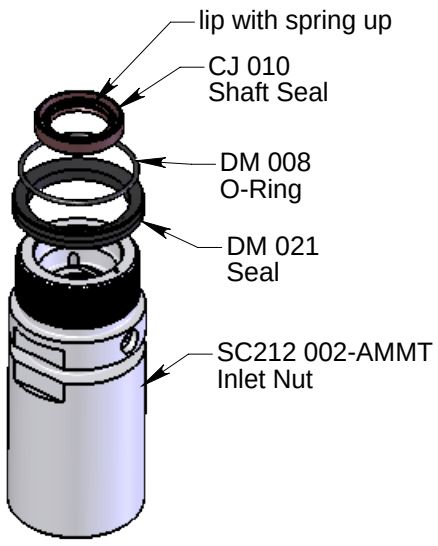

14. Install Compression Spring (WGR 056), O-Rings (SC250 016) and Face Seals (WGR 054) as shown in the Maintenance Section.

15. Pour lubricating fluid into Body until completely filled, allow time for air to bubble out. Apply anti-sieze to threads on Inlet Nut and Install into Body. Tighten Inlet Nut to 50 ft-lb. Top up with lubricant as shown in the Maintenance Section.

ENGINEERING THE POWER OF WATER
PL 545 É 06/14/2017 StoneAge®, All Rights Reserved