StoneAge® WGR Switcher (WGR 040-RXX-SWT)

Description:

The Switcher is designed to allow an operator to ñswitchò between a pulling/flushing mode and a cleaning mode while using the same head. This is made possible by an internal mechanism called a Poppet. When flow is cycled on and off, the Poppet redirects all flow to either the pulling/flushing (back) jets or the cleaning (front) jets. One Warthog Switcher Head can perform a cleaning job that would normally require two or more different heads with different jet configurations. Utilizing the Switcher head will increase both time and water consumption savings. The design is more efficient because all of the flow is directed to exactly where it is most useful for either pulling/flushing or cleaning.

Operation:

Begin with the Switcher head and WGR tool installed on the hose end. Move the tool into place where operation can safely begin. Bring pump slowly up to operating pressure. A pressure jump will occur when the Switcher engages; this should be below desired operational pressure. The operator may be able to ñfeelò the hose jump slightly. If the Switcher is not in the desired position, idle the pump back down and reduce flow to the hose and let it rest for up to 30 seconds. Bring the pump back up to pressure and the Switcher should now be in the desired position. Repeat the process above whenever it is desired to change the position of the Switcher to either pulling/flushing or cleaning mode.

Suggested Use:

- The pulling/flushing (back jet) mode transports the tool down the line quickly to a problem area in the pipe. Then the tool can be switched between the cleaning (front jet) mode to efficiently cut the blockage and the pulling/flushing mode to flush debris. This process can be repeated until the obstruction is removed.
- Pulling jets can be used to pull the tool up steep sections of pipe. Switching the tool to cleaning mode and pulling it back down the pipe will provide a thorough clean.
- The Switcher can also be used in conjunction with a camera truck to ensure proper cleaning. Tool can be switched to the cleaning mode in problem areas of the pipe if detected by the camera operator. Once the obstruction is cleared, the tool can be switched back to the pulling/flushing mode to flush the debris back down the line. Communication between the camera operator and the tool operator can greatly increase efficiency providing better cleaning in less time.

Trouble Shooting:

Tool Is Not Switching:

- If the Switcher appears to be "stuck" in either the pulling/flushing or cleaning mode, first cycle the pump up and down in pressure several times.
- If cycling the tool doesn't fix the problem, the Switcher will need to be removed from the WGR tool and disassembled (refer to the disassembly/assembly page). The Switcher is designed to handle debris up to .030 inches in diameter, but larger particles may lock up the mechanism. Thoroughly clean all the components once disassembled. Examine components for exessive wear or any other visible problems. Once cleaned and examined, the Switcher can be reassembled following the proceedure on the second page. If proper switching is not achieved with this procedure, the Switcher will need to be returned to StoneAge for evaluation.

Parts List:

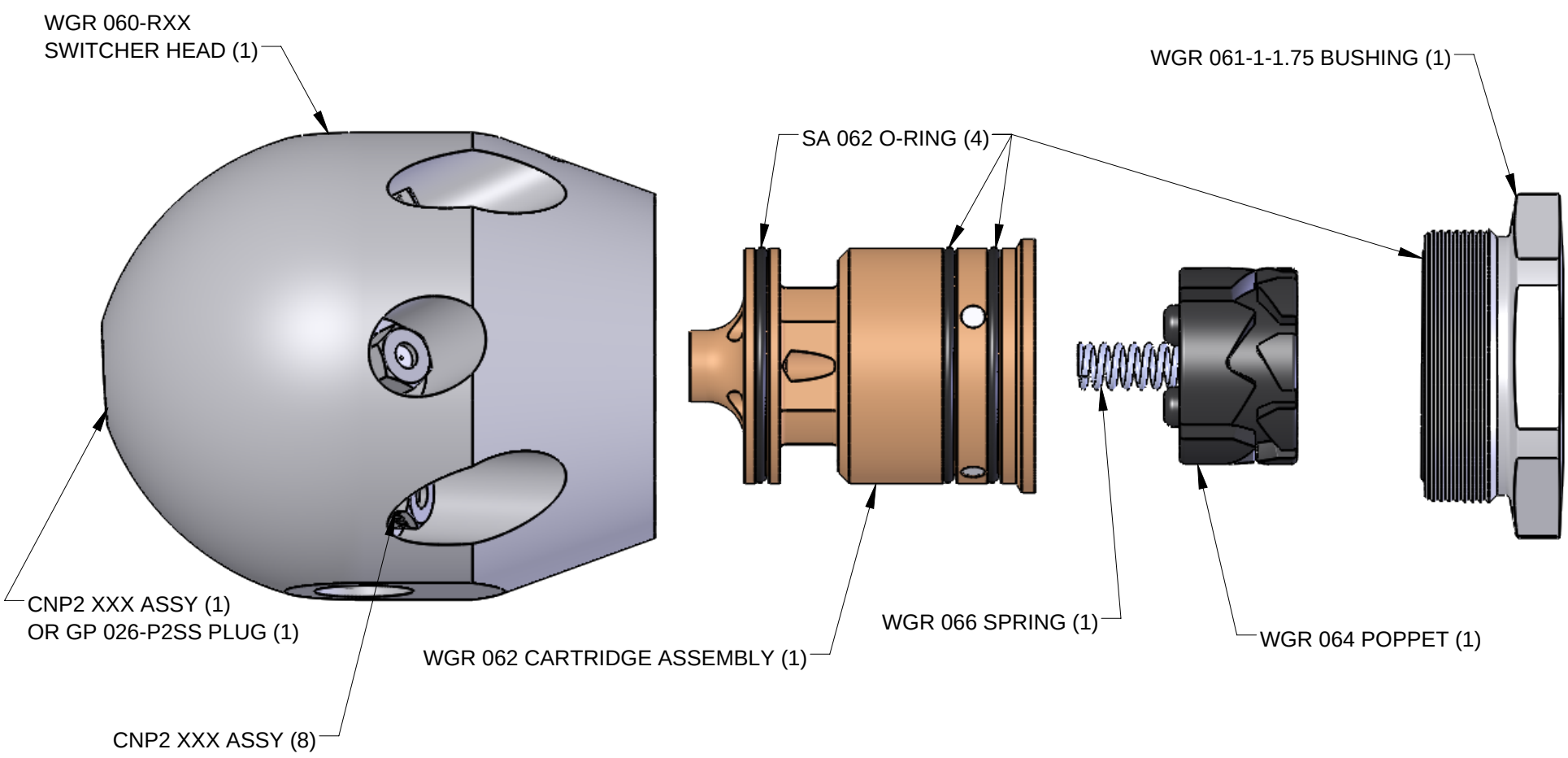

For terms and conditions of sale see: http://www.stoneagetools.com/terms
For limited warranty see: http://www.stoneagetools.com/warranty
For applicable patents see: http://www.sapatents.com

StoneAgeÈ WGR Switcher (WGR 040-RXX-SWT)

DISASSEMBLY:

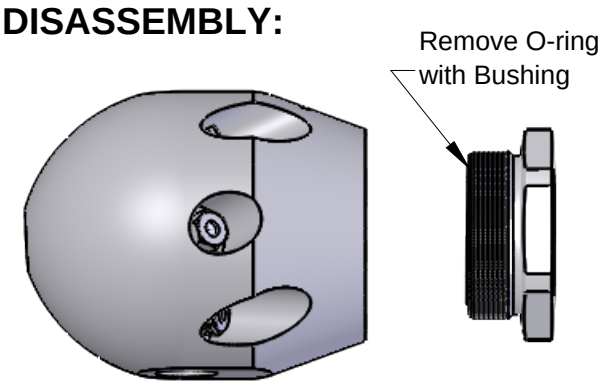

Step 1: Once the Switcher is removed from the tool, remove threaded bushing (WGR 061-1-1.75) from the head (WGR 060-RXX).

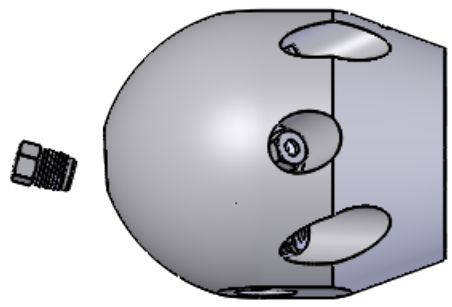

Step 2: Next, remove the front nozzle or plug (depending on jetted configuration).

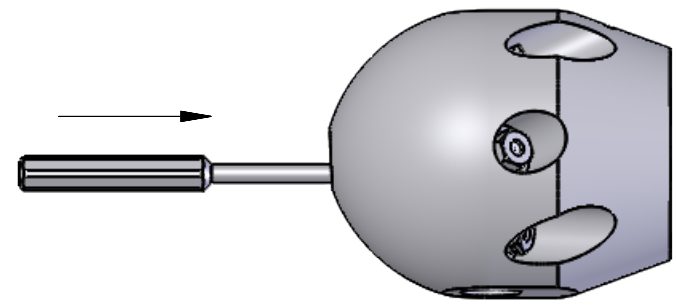

Step 3: Once the nozzle or plug is removed, insert an appropriate sized punch through the nozzle port to contact the nose of the cartridge assembly inside the head. Using an arbor press or light hammer taps, press the cartridge assembly out of the head.

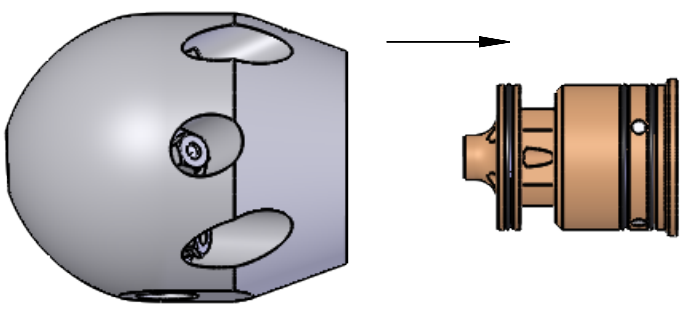

Step 4: Fully remove the cartridge assembly from the head.

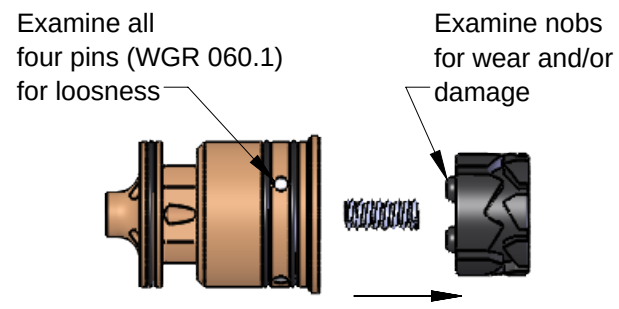

Step 5: Cycle poppet (WGR 064) inside the cartridge (WGR 062) until it can be removed. Inspect the poppet, cartridge, and spring (WGR 066) for signs of wear. Replace if necessary. If parts can be reused, wash thoroughly with warm water before reinstallation.

ASSEMBLY:

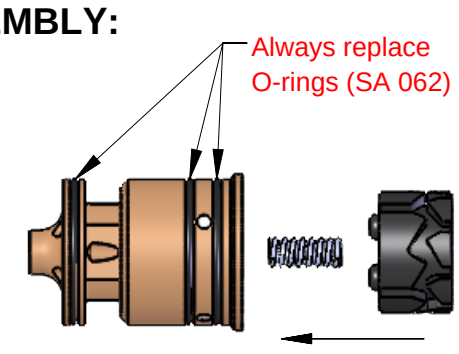

Step 1: Reinstall spring (WGR 066) into the cartridge (WGR 062). Install the poppet (WGR 064) into cartridge and cycle once to hold it in place.

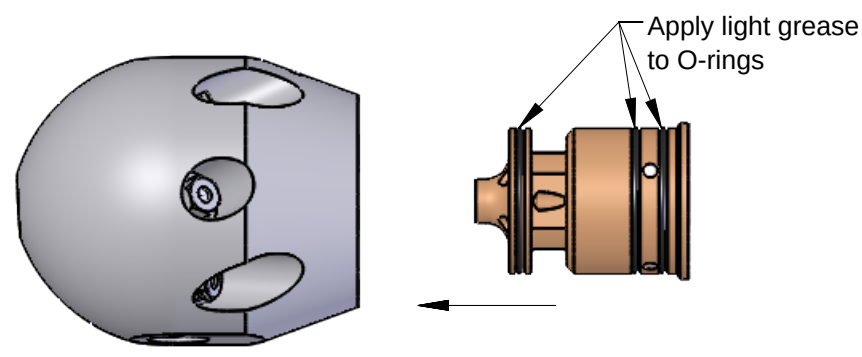

Step 2: Reinstall cartridge assembly back into the head. Use arbor press if needed to push the cartridge into the head (WGR 060-RXX).

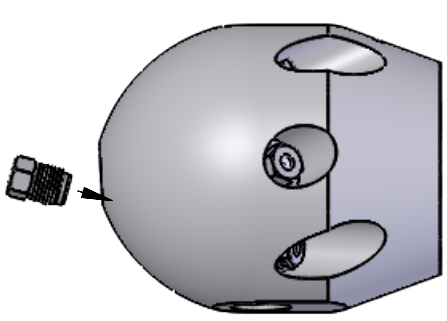

Step 3: Reinstall the front nozzle or plug into the head with appropriate teflon tape.

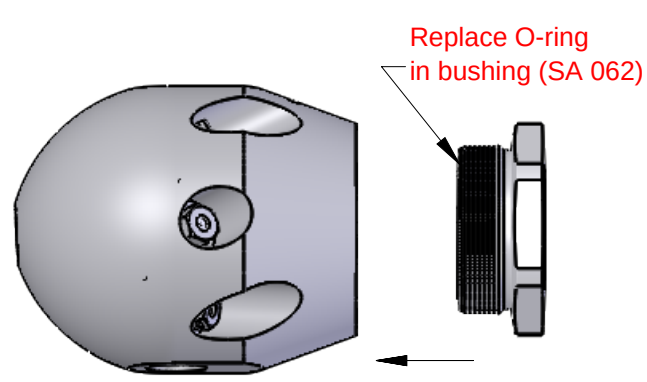

Step 4: Reinstall bushing (WGR 061-1-1.75) into the head. Apply light grease the the o-ring to hold in place. Tighten bushing until the is a solid bottom out. Head is ready to be reinstalled on the WGR tool.

ENGINEERING THE POWER OF WATER
PL 608 É 05/09/2017 StoneAgeÉ, All Rights Reserved